Volume 9, Edition 8 August

Valley of the Moon Amateur Radio Club WIRELESS

2005

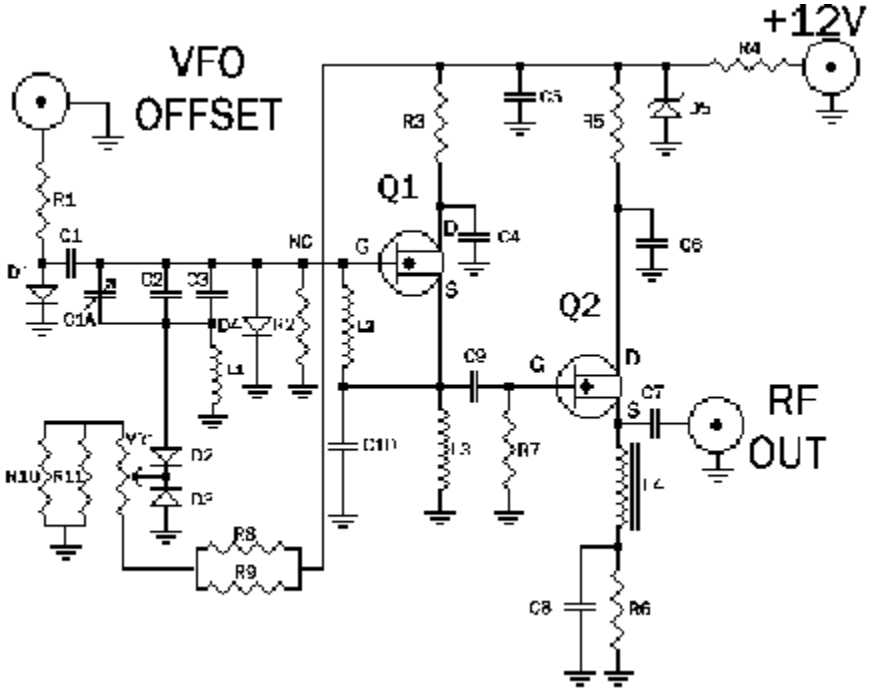

A TRANSMORGAFIER DIPTUBE FRAMEUS

Just the thing to build when the days get short and the weather gets gray.
(but for now, just get out there and operate while the weather's beautiful)

FROM THE TOP OF THE HILL

The officers and I have decided to let VOMARC take a vacation this month, so there will be no

meeting. There really wasn't much on the agenda to discuss, so we will resume our meeting schedule in September.

There is one more event for the club to cover and that's the Vintage Festival parade which will be on Sept. 25th. Eileen, KG6QNT, has volunteered to head up the operation so please contact her if you can help out. This event usually isn't as hectic as the 4th of July parade.

The FCC has recently proposed that Morse code be dropped as a requirement for all amateur radio licenses classes. This has stirred up a lot of controversy. Some say that this is long overdue and will greatly help the hobby. Others say that Morse code was the traditional start of radio and should continue to be required less the mode ceases to exit due to lack of operators.

I fall somewhere in the middle. I would like to have the 5wpm requirement for the Extra class. Call me old fashioned, but I think that the highest class should require a little "extra".

A copy of the NPRM&O is on the FCC Web site <http://gullfoss2.fcc.gov/prod/ecfs/retrieve.cgi?native_or_pdf=pdf&id_document=6518023930> To file on-line comments in this proceeding, WT Docket 05-235, or to view others' comments, visit the FCC Electronic Comment Filing System (ECFS) site <http://www.fcc.gov/cgb/ecfs/> and click on "Submit a Filing" or "Search for Filed Comments."

Thanks to Joel, NN6J, for conducting the latest VE session. There were three candidates and the report is that all came away with new or upgrades. Thanks also to Ken, N6KM, Alan, K6KLL, and Sanford, N7PIB, for helping.

Here is another grim reminder about safety when working with antennas.
An Ohio radio amateur died July 30 while attempting to perform a public service for his county's RACES/ARES program. Preble County RACES Radio Officer Robert W. "Bob" French II, N8EHA, of Eaton was on a tower at the New Paris fire station installing an antenna for the RACES/ARES program when an element came into contact with a power line. The shock knocked French from the tower, and he reportedly fell some 40 feet to the ground. French's son Aaron, KA8VUS, Al Stone, KB8RPO, and other members of the work party administered CPR to no avail. (ARRL Newsletter)

That's about it for this month.

Remember, no meeting this month but the Wednesday night net will still take place. So everyone please check in and club topics can be discussed if needed.

73, Jim, K6UUW

FROM JUST A LITTLE FARTHER DOWN THE HILL (VP'S REPORT)

From the VP Desk...

From the VP desk: This weekend our Ham Radio neighbor from Mexico was at Wrights Beach, on the coast, . Dana, XE1HDD/W6. Wine, cheese and crackers were enjoyed by all. PLUS the cool ocean fog. He has been here 3 weeks enjoying the cool weather on the coast and as usual steering up the VHF and HF bands in the area.

Tuesday; Ed, KA6OFR, finially got his tower back on line. Dan, KG6LJN, and TIM, KG6ASY, rebuilt his antennas pulled wire, solidered connections which got him fully functioning on 2mtrs, 220, 440. Many thanks to Tim who did the hard part, climb the tower and do the hard work.

73's see you at the AIR SHOW

DAN

CALENDAR

Upcoming events you might be interested in are:

Meetings, 7:30 pm (1930 local):
August 17-NO MEETING THIS MONTH!
September 21
October 19
November 23
December Xmas party to be determined

Club Breakfasts, 9:30 am (0930 local):
September 3
October 1
November 5
December 3

VE Sessions, at McDougal Hall, 9 am:
November 12

Nets:
ACS Monday evenings 1930 local (7:30 pm), 146.205 MHz +600/ PL 88.5 Hz
VOMARC Wednesday evenings, except meeting night, 1930 (7:30 pm), 145.35 MHz -600/ PL 88.5 Hz

Hamfests/Conventions:
San Francisco Section Convention,
Pacificon, San Ramon, October 14 thru 16

Contests:
ARCI PSK-31 Sprint, September 11
ARRL VHF QSO Party, September 10 –11
ARCI Fall QRP QSO, October 22 - 23
ARRL CW Sweepstakes, November 5 – 7
ARRL Phone Sweepstakes, Nov. 19 –21
ARRL 10 meter Contest, December 10 –11
Straight Key Night, December 31, Jan 1

SALE PAGES

Ed, KA6OFR has a complete COMMODORE computer that he wishes to sell to the highest bidder. Complete in original boxes are the tower, printer , monitor , key board and mouse ,

with extra goodies. His phone number is 996-0962

THE VOMARC WIRELESS

VOLUME 9 EDITION 8

A publication of VOMARC, the Valley of the Moon Amateur Radio Club – W6AJF

Frank C. Jones – W6AJF

Honorary President in Perpetuity

CAST OF CHARACTERS

Jim Hill, K6UUW – President

Dan Sorrick, KG6LJN– Vice-President

Joan Brady, W6WXU – Secretary

Ken McTaggart, N6KM – Treasurer

Eileen Adams, KG6QNT, Membership Chair

Mike Miller, WB6TMH – Radio Officer

Ken McTaggert, N6KM – ACS

Jan Bush, AE6FQ – Webmeister

Joel Nadler, NN6J – VE Liaison

Darrel Jones, WD6BOR – Editor

Receipt of the Wireless is one of the most sought after benefits of membership in VOMARC.

CLUB MEETINGS are held on the third Wednesday of each month, alternating between McDougal Hall at the Sonoma Developmental Center, Eldridge, and the Sonoma Fire Station, 630 2nd Street West, Sonoma. Meetings start at 19:30 local (7:30 P.M.).

WEB PAGE:
http://www.vomarc.org/

Nets are held every Wednesday night at 19:30 (7:30 P.M.) local, except meeting nights on the 145.350 repeater, -600 kHz, PL 88.5 Hz.

ACS holds a net each Monday evening at 19:30 local on the 146.205, +600, PL 88.5 Hz repeater.

PACKET STATION INFO: The VOMARC packet station is on 144.910 as “SNV1EC”. “SNVGW” can be used as a gateway digipeating on 223.66 MHz. The node name is “SNVND”.

CLUB BREAKFASTS are held on the first Saturday of each month at Issa’s Restaurant, 18999 Sonoma Highway, Sonoma. The fun starts at 09:30 local.

Comments and submissions of material may be sent to:

wd6bor@vom.com

Valley of the Moon ARC, Inc.

175 First Street West

Sonoma, CA 95476

Valley of the Moon ARC
1496 Nut Tree Lane
Sonoma, CA 95476

NOTICE!!! THE NEXT VOMARC MEETING IS WEDNESDAY, SEPTEMBER 21, AT 7:30 P.M. THERE WILL BE NO OFFICIAL AUGUST MEETING (BUT YOU CAN GET TOGETHER SOMEWHERE FOR COFFEE AND GOSSIP!)

VOMARC MEMBERSHIP

VOMARC 2005 Membership Dues: $15/year individual; $5/year family member.

VOMARC encourages its members to join the ARRL. More information is available at www.arrl.org.
QST is available to blind and physically handicapped individuals on audio cassette from the Library of Congress, National Library Service for the Blind and Physically Handicapped. Call 1-800-424-8567.

Name:_____CALL:_____EMAIL:_____

Address:_____APT:_____

City:_____State:_____ZIP:_____

Name:_____CALL:_____EMAIL:_____

Name:_____CALL:_____EMAIL:_____

VOMARC: $_____

Membership Moment, From the Database Queen

Please check the mailing label on this newsletter. It tells you when your VOMARC dues are due. Dues may be mailed to Ken N6KM, or Jim K6UUW, 1496 Nut Tree Lane, Sonoma, CA 95476, or brought to the next meeting. If there is any mistake, please do not shoot the messenger; email Eileen KG6QNT at Eileen@vom.com. Your check should be made payable to: **VOMARC**